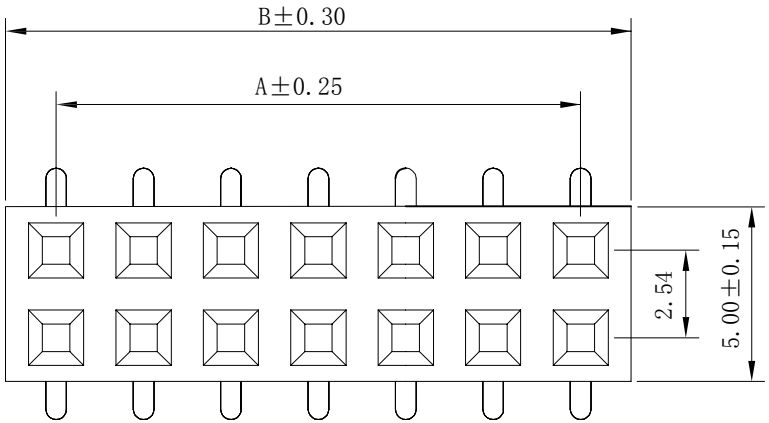

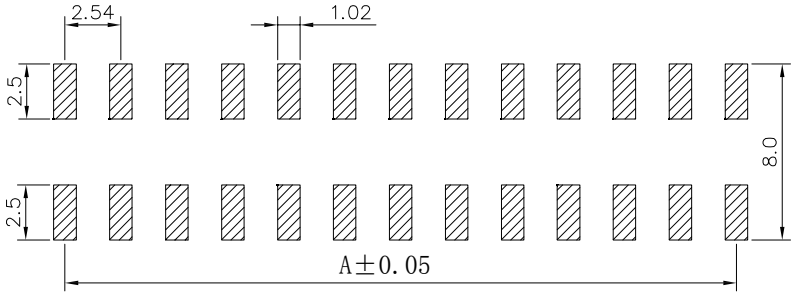

COMMEND P.C.B LAYOUT
PCB TOLERANCE:±0.05(TOP VIEW)

EST2504 W VS- 2*NP X - X - X X - NK-HF

- EST2504: 羿通代码+间距
- W: W示意针座; W后无0默认材质为V0; W后带2示意V2
- VS: V示意180° 直针，VS立式; R示意90° 弯针，RS卧式; RG高弯
- 2: 1单排; 2双排
- NP: PIN数
- X: X本色; B黑色; R红色; L蓝色; Y黄色; G绿色
- X: X普通; B带扣; U超薄; PH组合排针; FH组合排母; H高弯; K打脚K; D防呆型; 2示意有柱; LO带定位无K; KLO带定位打K
- X: 1为PPS, 2为PBT, 3为LCP, 4为ABS, 5为PA6T, 6为PA66
- X: G为PIN针镀金; S为PIN针镀锡
- NK: NK为NO MARK; MK为有MARK
- HF: HF无卤; NF普通含卤

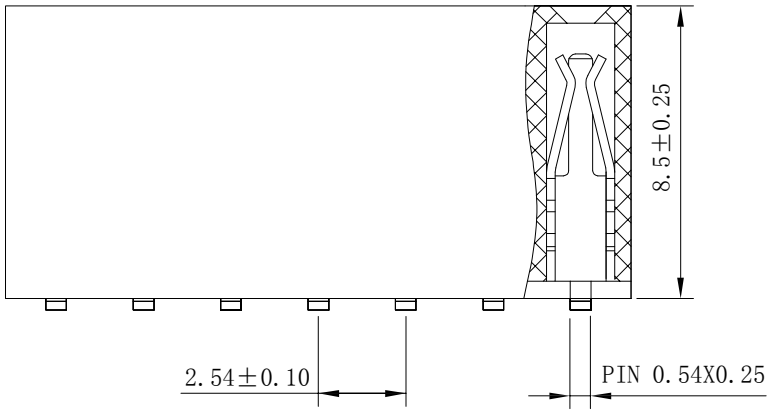

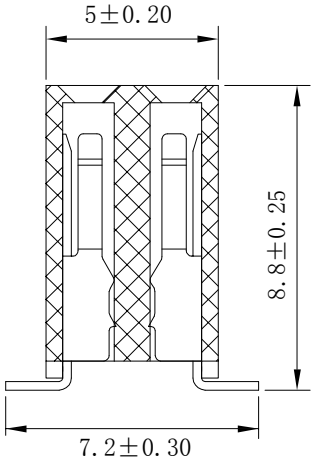

No. of	DIM.A	DIM.B	No. of	DIM.A	DIM.B	No. of	DIM.A	DIM.B	No. of	DIM.A	DIM.B
1	0.00	2.54	11	25.40	27.94	21	50.80	53.34	31	76.20	78.74
2	2.54	5.08	12	27.94	30.48	22	53.34	55.88	32	78.74	81.28
3	5.08	7.62	13	30.48	33.02	23	55.88	58.42	33	81.28	83.82
4	7.62	10.16	14	33.02	35.56	24	58.42	60.96	34	83.82	86.36
5	10.16	12.70	15	35.56	38.10	25	60.96	63.50	35	86.36	88.90
6	12.70	15.24	16	38.10	40.64	26	63.50	66.04	36	88.90	91.44
7	15.24	17.78	17	40.64	43.18	27	66.04	68.58	37	91.44	93.98
8	17.78	20.32	18	43.18	45.72	28	68.58	71.12	**38**	**93.98**	**96.52**
9	20.32	22.86	19	45.72	48.26	29	71.12	73.66	39	96.52	99.06
10	22.86	25.40	20	48.26	50.80	30	73.66	76.20	**40**	**99.06**	**101.60**

SPECIFICATIONS

Current Rating: 3Amps
Insulation Resistance: 1000MΩ Min
Contact Resistance: 20mΩ Max
Withstanding Voltage: AC 1000V
Operation Temperature: -25℃~+85℃
Contact Material: Brass
Standard: PA6T
Insrlator Material: Polyester(UL 94V-0)
Contact Plating: Gold Flash
Max.Processing Temp: 240° C for30-60seconds
(260° C for5seconds)

东莞市羿通实业有限公司
DONGGUAN EASTOM ELECTRONIC Co.,Ltd.

日期版次 REVISION	日 期 DATE	变更内容 DESCRIPTION	核 准 APPROVALBY

料号PART NO: EST2504WVS-2*NPX-X

品名 TITLE: 2.54排母 180° （双排）

材料:	单位: MM	包装规格:	比例: 1:1
制图:	审核:	核准:	日期: 2022.07.13

一般公差 GENERAL TOLERANCE
X.X ±0.25
X.XX ±0.20
ANGLE ±1°

YXY